SALES LAYOUT

ITEM	DESCRIPTION	WIDTH	LENGTH	QTY	REMARKS	SOURCE

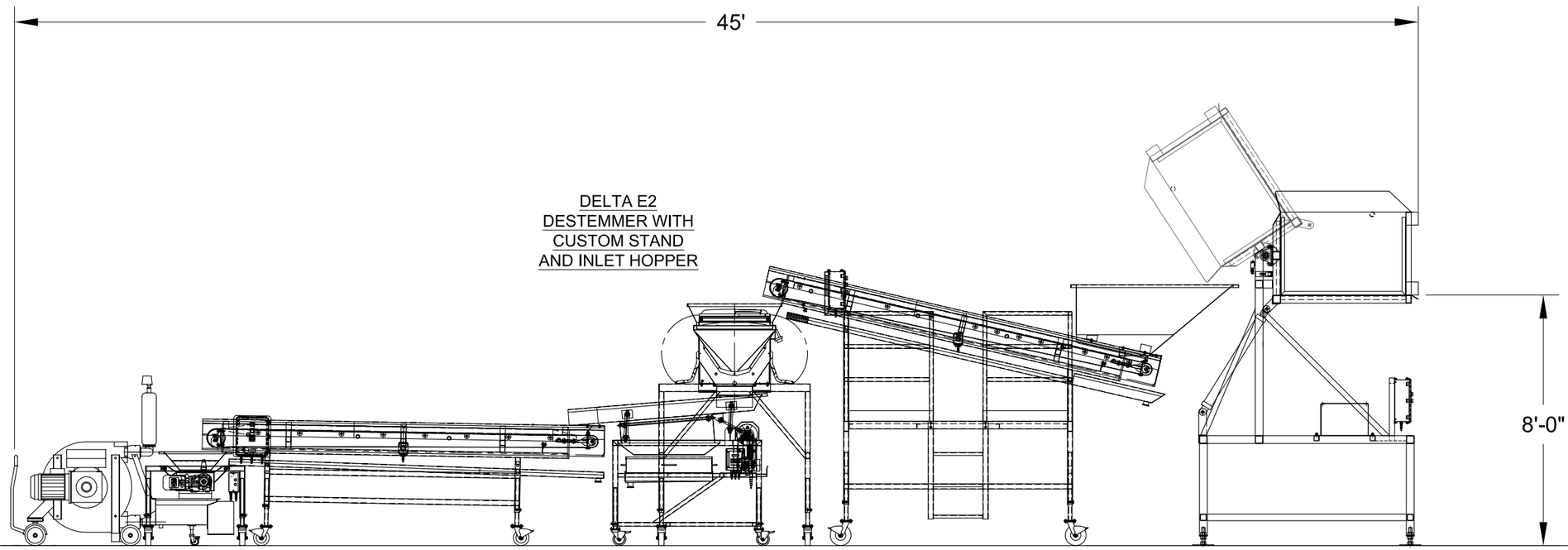

ELEVATION VIEW

SCALE: 1/4" = 1'-0"

REV	DATE	NAME	DESCRIPTION

APPLICATION

PART NO.	USED ON:	NEXT ASSY

TOLERANCES:
UNLESS OTHERWISE SPECIFIED

ALL DIMENSIONS ARE IN INCHES:

DECIMAL = X.X ± .030"
X.XX ± .010"
X.XXX ± .005"

FRACTION = ± 1/32"
ANGLE = ± 1°
FINISHES = 125√

BREAK ALL CORNERS. REMOVE ALL BURRS AND SHARP EDGES.

APPROVED BY:	DATE:
ENGINEERED BY:	DATE:
DRAWN BY: GN	DATE: April 28, 2008
SHEET SIZE: 11" x 17"	SCALE: 1/4" = 1'-0"
PREVIOUS NUMBER:	
FILE NAME:	

NOTICE: THIS DRAWING IS THE PROPERTY OF P&L SPECIALTIES. IT CONTAINS PROPRIETARY INFORMATION AND MUST BE RETURNED UPON REQUEST. DO NOT CIRCULATE, REPRODUCE, OR DIVULGE TO OTHER PARTIES WITHOUT WRITTEN CONSENT OF P&L SPECIALTIES.

P&L SPECIALTIES
MANUFACTURING THE FINEST STAINLESS STEEL EQUIPMENT
1650 ALMAR PARKWAY - SANTA ROSA , CA. 95403
Phone: 707-573-3141 Fax: 707-573-3140
Web site = www.pnlspecialties.com

SORTING LAYOUT
MANUAL FULL SERVICE GRAPE SORTING LINE
ELEVATION VIEW

SHEET #:	CUSTOMER:	JOB NUMBER:	DRAWING NUMBER:	REV.
1 of 2	THE RANCH		#02	A